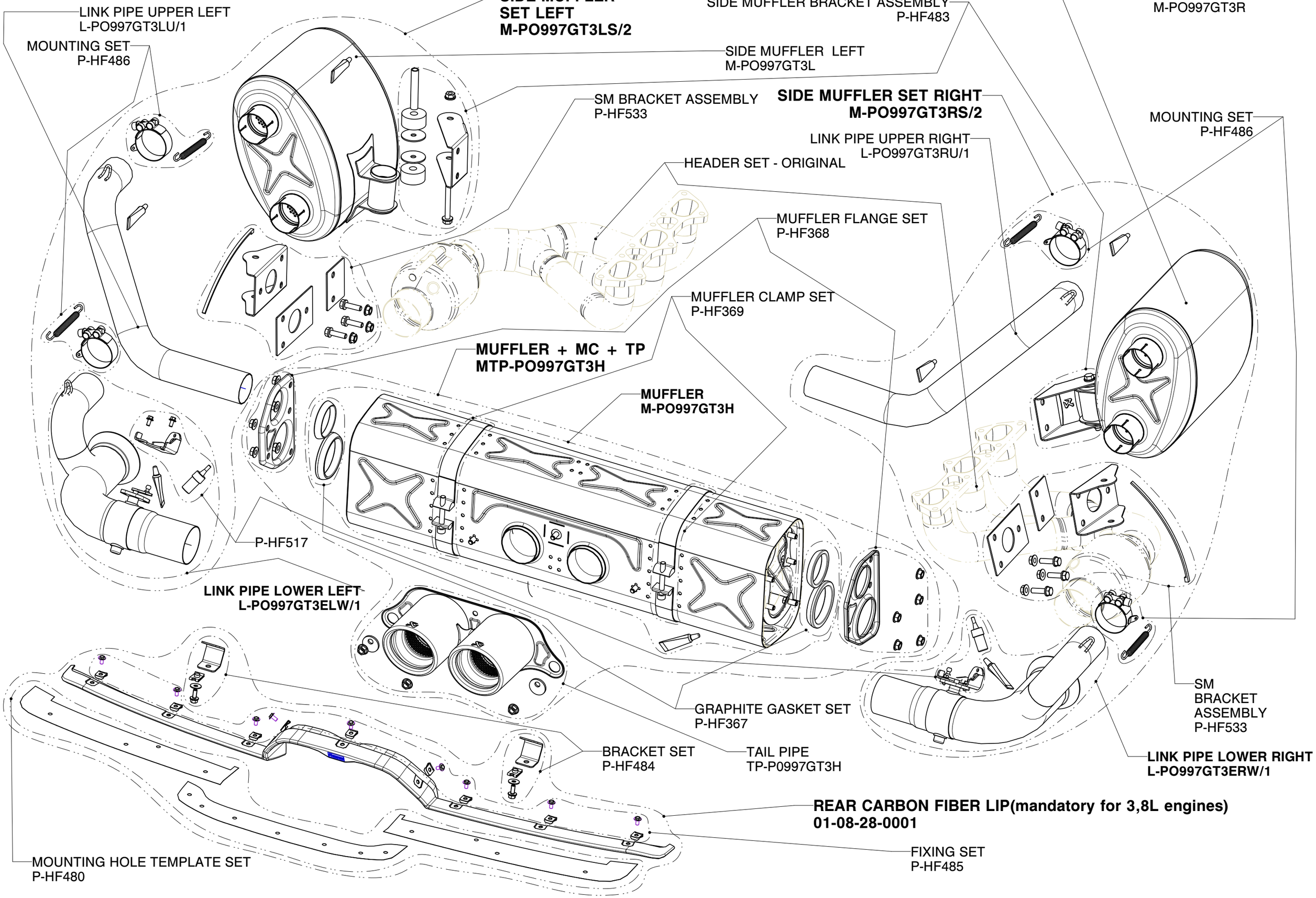PORSCHE 911 GT3/RS 3.6L/3.8L, type 997 Titanium exhaust system / "SO RACE"
Product code: S-PO997GT3SO2-R 112489